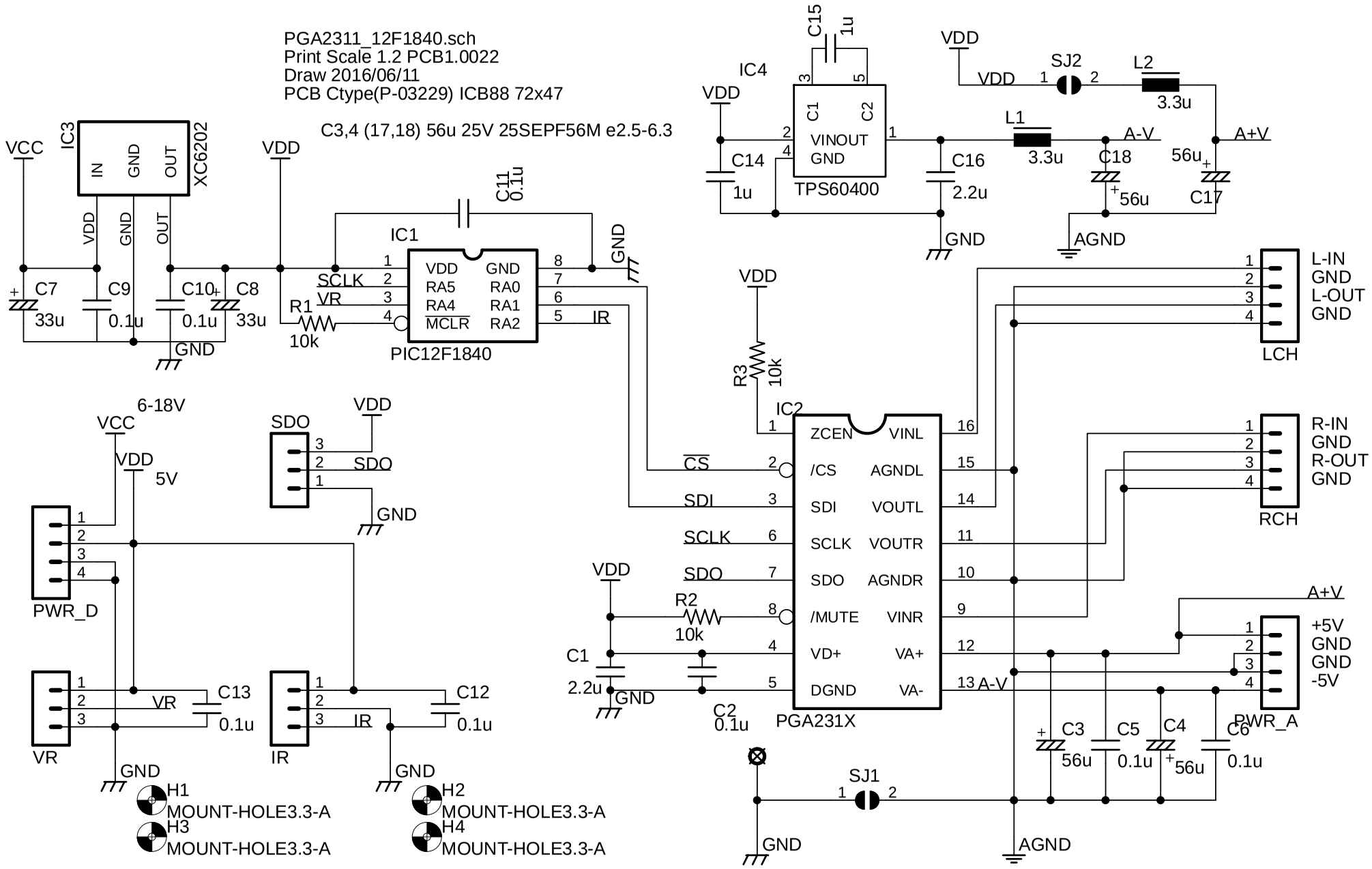
PGA2311_12F1840.sch
Print Scale 1.2 PCB1.0022
Draw 2016/06/11
PCB Ctype(P-03229) ICB88 72x47
C3,4 (17,18) 56u 25V 25SEPF56M e2.5-6.3
IC3
XC6202
IN
GND
OUT
VCC
VDD
GND
OUT
C7
33u
C9
0.1u
C10
0.1u
C8
33u
GND
VDD
C11
0.1u
IC1
PIC12F1840
VDD
RA5
RA4
MCLR
GND
RA0
RA1
RA2
SCLK
VR
IR
R1
10k
GND
IC4
TPS60400
C1
C2
VINOUT
GND
C15
1u
C14
1u
C16
2.2u
VDD
SJ2
L2
3.3u
L1
3.3u
A-V
A+V
C18
56u
C17
56u
AGND
VDD
R3
10k
IC2
PGA231X
ZCEN
/CS
SDI
SCLK
SDO
/MUTE
VD+
DGND
VINL
AGNDL
VOUTL
VOUTR
AGNDR
VINR
VA+
VA-
CS
SDI
SCLK
SDO
R2
10k
C1
2.2u
C2
0.1u
GND
A-V
LCH
L-IN
GND
L-OUT
GND
RCH
R-IN
GND
R-OUT
GND
PWR_A
+5V
GND
GND
-5V
C3
56u
C5
0.1u
C4
56u
C6
0.1u
SJ1
AGND
6-18V
VCC
VDD
5V
PWR_D
SDO
VDD
SDO
GND
VR
C13
0.1u
GND
IR
C12
0.1u
GND
H1
MOUNT-HOLE3.3-A
H2
MOUNT-HOLE3.3-A
H3
MOUNT-HOLE3.3-A
H4
MOUNT-HOLE3.3-A