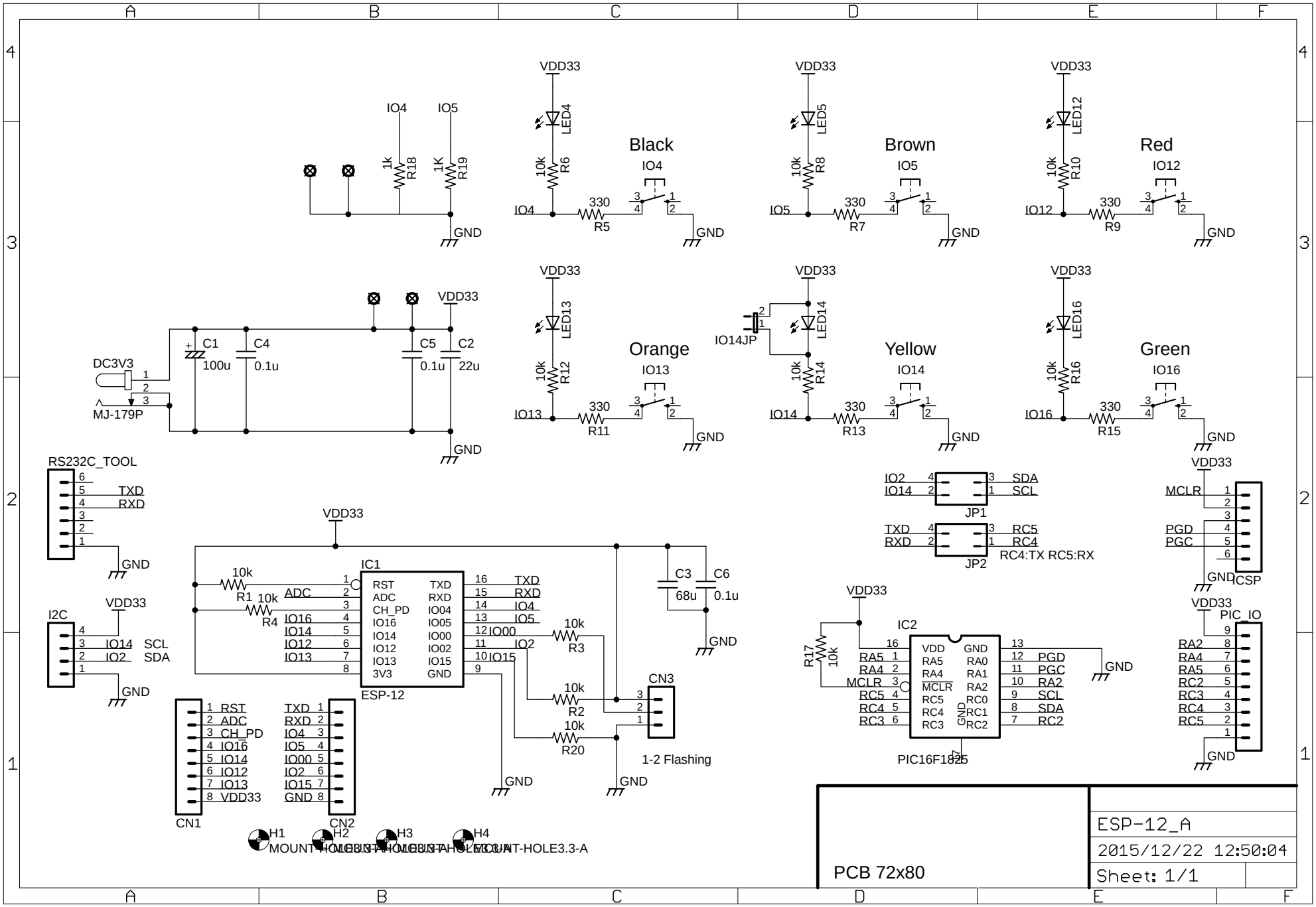
VDD33
IO4
IO5
1k
R18
1K
R19
GND
LED4
10k
R6
Black
IO4
330
R5
LED5
R8
Brown
IO5
R7
LED12
R10
Red
IO12
R9
LED13
R12
Orange
IO13
R11
IO14JP
LED14
R14
Yellow
IO14
R13
LED16
R16
Green
IO16
R15
DC3V3
MJ-179P
C1
100u
C4
0.1u
C5
0.1u
C2
22u
RS232C_TOOL
TXD
RXD
I2C
IO14
SCL
IO2
SDA
IC1
ESP-12
RST
ADC
CH_PD
IO16
IO14
IO12
IO13
3V3
TXD
RXD
IO4
IO5
IO00
IO2
IO15
GND
R1
R4
R3
R2
R20
C3
68u
C6
0.1u
CN3
1-2 Flashing
CN1
CN2
VDD33
H1
H2
H3
H4
MOUNT-HOLE3.3-A
JP1
JP2
RC4:TX RC5:RX
MCLR
PGD
PGC
CSP
IC2
PIC16F1825
R17
10k
RA5
RA4
RC5
RC4
RC3
RA0
RA1
RA2
RC0
RC1
RC2
PGD
PGC
SCL
SDA
PIC_IO
RA2
RA4
RA5
RC2
RC3
RC4
RC5
PCB 72x80
ESP-12_A
2015/12/22 12:50:04
Sheet: 1/1